C-26

forward '70

PATENT OFFICE
APR 17 1964
DIVISIONS 81 & 82

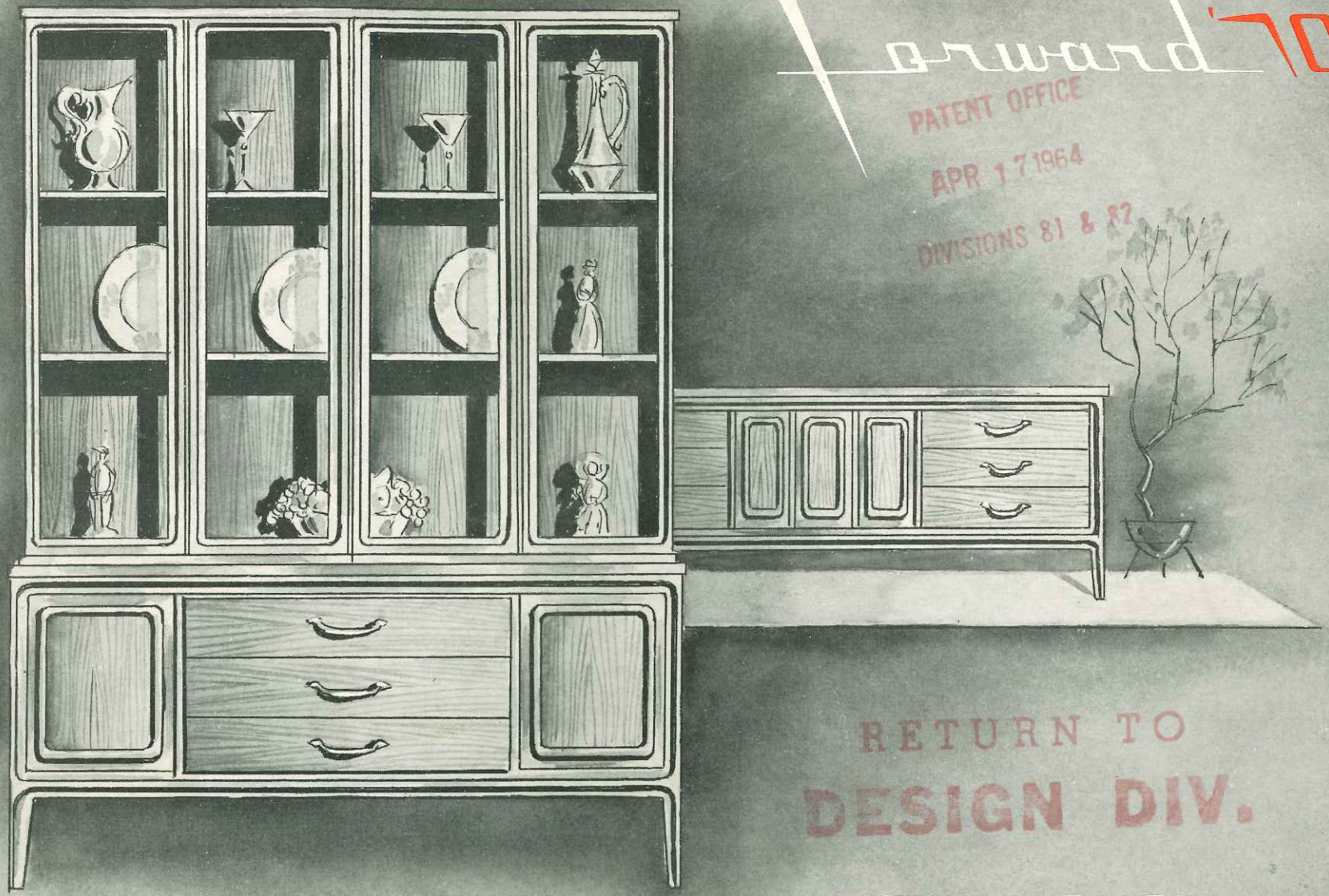

RETURN TO
DESIGN DIV.

Broyhill
PREMIER

Forward '70

FORWARD 70 . . . 48 correlated pieces for living room, dining room, bedroom, family room and random areas through the home.

FORWARD 70 . . . expresses a natural native style that is newer than Scandinavian . . . 1970 America.

FORWARD 70 . . . is crafted of selected American Walnut. Its entirely different Nutria finish is subtle and light in tone. Hand bleaching brings out all the natural beauty of the wood graining and presents a new color concept keyed to compliment any decor.

FORWARD 70 . . . design features include gentle routing and shading lending a carved effect. Freeform and classically simple door and drawer pulls of brushed bronze give an air of sophisticated good living.

FORWARD 70 . . . unaffected by the past, is a prediction of the future and is another "first in design" for Broyhill Premier.

PATENT OFFICE
APR 17 1964
DIVISIONS 81 & 82

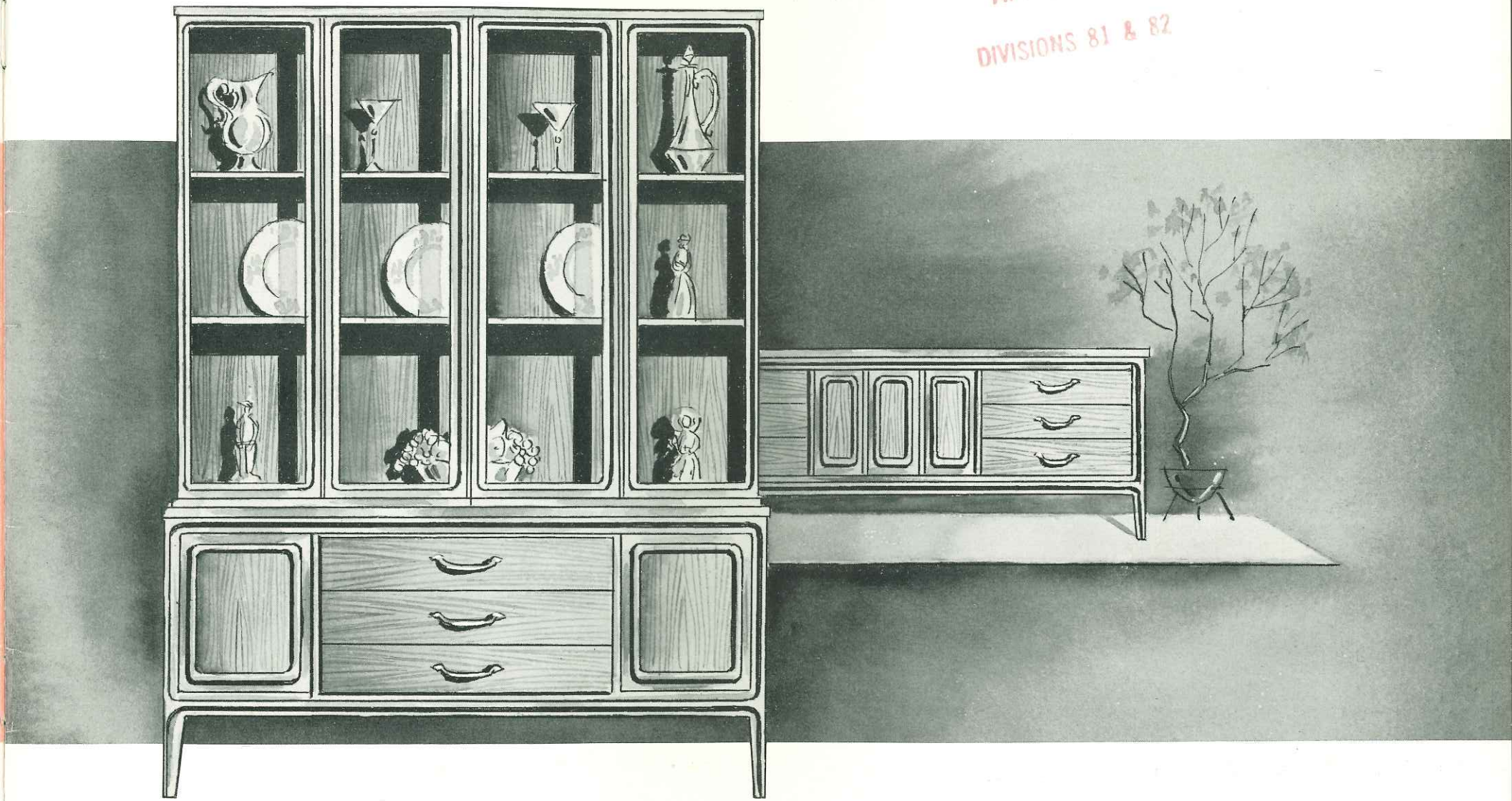

Broyhill
PREMIER

Forward '70

6125 - 62 Breakfront
58 x 17 x 75½ H

6125 - 44 Extension Table
60 x 40 x 72 Ext.
6125 - 34 Set of 2-12″ Leaves
6125 - 40 Dinette Table
50 x 36

6125 - 13 Credenza Buffet
60 x 17 x 30 H

Broyhill PREMIER

6125 - 80 Arm Chair

6125 - 81 Side Chair

6125 - 10 Buffet
54 x 18 x 31 H
3 Drawers, 3 Doors
silver tray

6125 - 25 Hutch
54 x 14 x 22 H

Broyhill
PREMIER

6125 - 10 Buffet
54 x 18 x 31 H
3 Drawers, 3 Doors
silver tray

6125 - 62 Breakfront
58 x 17 x 75 H
3 Drawers, 4 Doors
silver tray
and 2 shelves behind doors

6125 - 11 Buffet
62 x 18 x 31 H
3 Drawers, 2 Doors
2 additional shelves,
silver tray

D-56-4 Broyhill-Premier Co., "Forward 70" catalog, received 4-17-64
page 5 (copy in Box C26 Modern Furniture, Group 292 Library)

Broyhill PREMIER

6125 - 13 Credenza Buffet
60 x 17 x 30 H
4 trays behind doors
2 adjustable shelves
5 Doors

6125 - 60 China
38 x 17 x 68 H
tray behind doors partitioned and lined for silver

6125 - 72 Room Divider Base
54 x 17 x 26 H
2 drawers, 2 doors, 2 additional shelves, silver tray

6125-73 Room Divider Top
52 x 14 x 44 H
2 Doors

Forward '70

6125 - 72 Room Divider Base
54 x 17 x 26 H
2 drawers, 2 doors, 2 additional shelves, silver tray

6125 - 44 Extension Table
60 x 40 x 72 Ext.
6125 - 34 Set of 2-12″ Leaves

6125 - 81 Side Chair

6125 - 80 Arm Chair

6125-82 Arm Chair

6125-83 Side Chair

6125 - 42 Drop Leaf Table
60 x 40 x 72 Ext.
leaves down 26 x 40
6125 - 32 Set of 2 - 12″ Leaves

6125 - 81 Side Chair

6125 - 80 Arm Chair

Forward '70

6125 - 46 Harvest Table
leaves up 72 x 44
leaves down 72 x 24

6125 - 80 Arm Chair

6125 - 81 Side Chair

Forward '70

6125 - 60 China
38 x 17 x 68 H

6125 - 45 Rounded Square Table
42 x 42 x 54 Ext.
6125 - 35 Set of 2 - 12″ Leaves

6125 - 10 Buffet
54 x 18 x 31 H

Broyhill
PREMIER

6125 - 80 Arm Chair

6125 - 81 Side Chair

940 - 30 Party Table
48 x 48 x 26 H

940 - 31 Party Chairs
27 x 27 x 29 H

6125-75 Serving Cart
70 x 16 x 30 H
leaves down 47 x 16 x 30 H
3 Drawers
drawer partitioned and
lined for silver

6125 - 70 Server
38 x 17 x 28½ H
3 Doors
tray behind doors partitioned
and lined for silver

940-54 Functional Chests
32 x 17 x 29 H
3 Drawers

940-55 Functional Door Unit
32 x 17 x 29 H
1 adjustable shelf
3 Doors

940 - 53 Triple Base
$96\frac{1}{2}$ x $18\frac{1}{4}$ x $4\frac{1}{2}$ H

Broyhill
PREMIER

940-54 Functional Chest
32 x 17 x 29 H
3 Drawers

940-55 Functional Door Unit
32 x 17 x 29 H
1 adjustable shelf
3 Doors

940 - 52 Double Base
$64\frac{1}{2}$ x $18\frac{1}{4}$ x $4\frac{1}{2}$ H

Forward '70

940 - 61 Desk Bookcase
31½x12 x 48 H

940-54 Functional Drawer Chest
32 x 17 x 29 H
3 Drawers

940-55 Functional Door Unit
32 x 17 x 29 H

940 - 53 Triple Base
96½ x 18¼ x 4½ H

940-60 Open Bookcase
31½ x 12 x 48 H

940-54 Functional Chest
32 x 17 x 29 H
3 Drawers

940 - 51 Single Base
32½ x 18¼ x 4½ H

940-55 Functional Door Unit
32 x 17 x 29 H
1 adjustable shelf
3 Doors

940 - 51 Single Base
32½ x 18¼ x 4½ H

Forward '70

6120-54 Panel Bed 4/6

6120-90 Night Stands
24 x 15 x 23 H

6120 - 42 Chest
44 x 18 x 45 H

6120-33 Triple Dresser
66 x 18 x 31 H
6120-26 Mirror
Plate 20 x 40
Overall 22 x 42

Broyhill
PREMIER

6120 - 22 Double Dresser
58 x 18 x 31 H
6 Drawers

6120 - 36 Mirror
Plate 42 x 30
Overall 44 x 32

6120 - 22 Double Dresser
58 x 18 x 31 H
6 Drawers

6120 - 26 Mirror
Plate 20 x 40
Overall 22 x 42

Forward '70

Broyhill
PREMIER

CONFIDENCE BRAND NAMES SATISFACTION

6120-33 Triple Dresser
66 x 18 x 31 H
6 Drawers, 2 Doors
3 trays behind doors
6120-26 Mirror
Plate 20 x 40
Overall 22 x 42

6120-42 Chest
44 x 18 x 45 H
2 partitions and tray
behind doors
3 Drawers

Forward '70

6120 - 40 Chest
40 x 18 x 44 H
2 shirt partitions third
drawer from bottom
5 Drawers

Broyhill
PREMIER

6120 - 25 Magna Dresser
54 x 18 x 43 H
shirt partition and 1 stationary shelf
behind doors. 2 doors.
8 drawers

6120-54 Panel Bed 4/6
6120-51 Panel Bed 3/3

6120-56 Footless Panel Bed 4/6 or 5/0
6120-53 Footless Panel Bed 3/3
Headboard only

6120-90 Night Stands
24 x 15 x 23 H
One Drawer

6120 - 58 Panel Bed 6/6

6120-90 Night Stands
24 x 15 x 23 H
One Drawer

6120 - 60 Bookcase Bed 4/6
6120 - 68 Bookcase Bed 6/6
electrical outlet

6120-90 Night Stands
24 x 15 x 23 H
One Drawer

Forward '70

940-25 Desk
leaf down 46 x 22 x 29½ H
leaf up 64
4 drawers and file drawer

6125 - 81 Side Chair

Forward '70

6120 - 60 Bookcase Bed 4/6
electrical outlet

6120- 90 Night Stands
24 x 15 x 23 H
One Drawer

6120 - 40 Chest
40 x 18 x 44 H
5 Drawers

6120 - 22 Double Dresser
58 x 18 x 31 H
6 Drawers
6120 - 36 Mirror
Plate 42 x 30
Overall 44 x 32

Broyhill
PREMIER

940 - 12 Cocktail Table
60 x 22 x 16 H
2 Drawers

940 - 06 Lamp Table
28 x 18 x 23 H
One Drawer

940 - 00 Step Table
20 x 30 x 23 H
One Drawer

Broyhill
PREMIER

940 - 11 Cocktail Table
48 x 20 x 16 H

Forward '70

940 - 20 Commode
24 x 18 x 21 H
2 Doors

Broyhill PREMIER

CONFIDENCE
MEMBER OF
BRAND NAMES
FOUNDATION, INC.
SATISFACTION

All drawer sides and backs are made of genuine hardwoods. Drawer bottoms are veneered with mahogany. Drawer interiors are carefully sanded, lacquered, and waxed for smoothness. Dovetailed jointing insures long lasting durability.

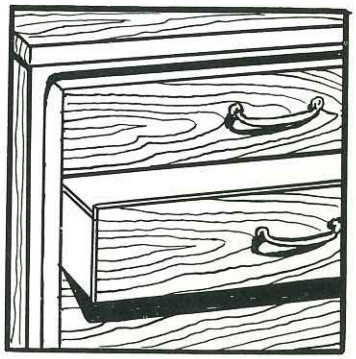

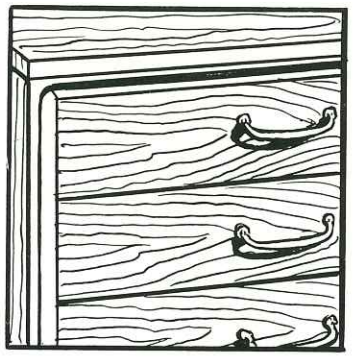

Custom design drawer pulls complement both style and finish.

In Broyhill Premier you will find the worthiness of woods with character, and a distinctive, enduring hand-bleached finish brought toghether with Broyhill Premier's special quality standards. All case pieces are fully dustproof. Drawers are of dovetail construction, centerguided to glide at a touch. The rich, selected walnut veneers are BROYBONDED. Mirrors and glass are lensclear. Created and designed especially for Broyhill Premier by some of America's foremost color stylists. The new rich Premier finish is applied on wood carefully selected for grain character, then handbleached to bring out all the beauty of the wood. The finish is then handblended by highly skilled craftsmen to give depth and softness of color. It is hand-rubbed and waxed to a rich patina- a finish with all the beauty of the ages brought into your home through the ingenuity of Broyhill skilled craftsmen.

Mirrors are guaranteed best quality plate glass. Solid Pecan wood frame.

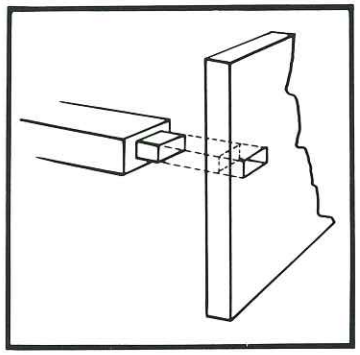

Cases are ruggedly constructed with mortise and tenon joints reinforced with moisture resistant Urea Resin Glue.

Broyhills' new "No-Drop Broyglide" construction will prevent sticky unlevel drawers in the future. The drawers will always be level and will not drop when pulled out, permitting at least 75% of the drawer to be pulled out of the case. The more weight in the drawer, smoother is the action. The "No-Drop Broyglide" is longer lasting and trouble free.

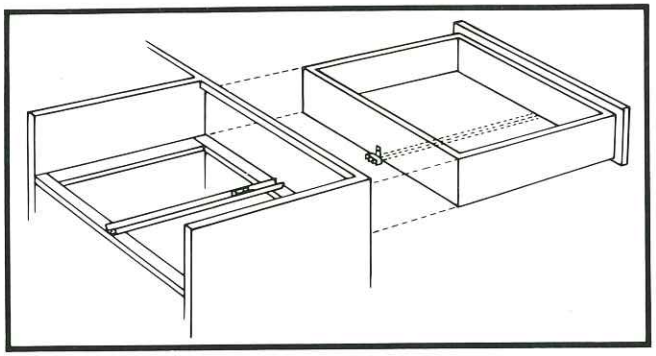

Veneer plywood dust proofing under every drawer adds extra strenght and individualizes each drawer compartment.

PRODUCED BY ALDERMAN STUDIOS, INCORPORATED

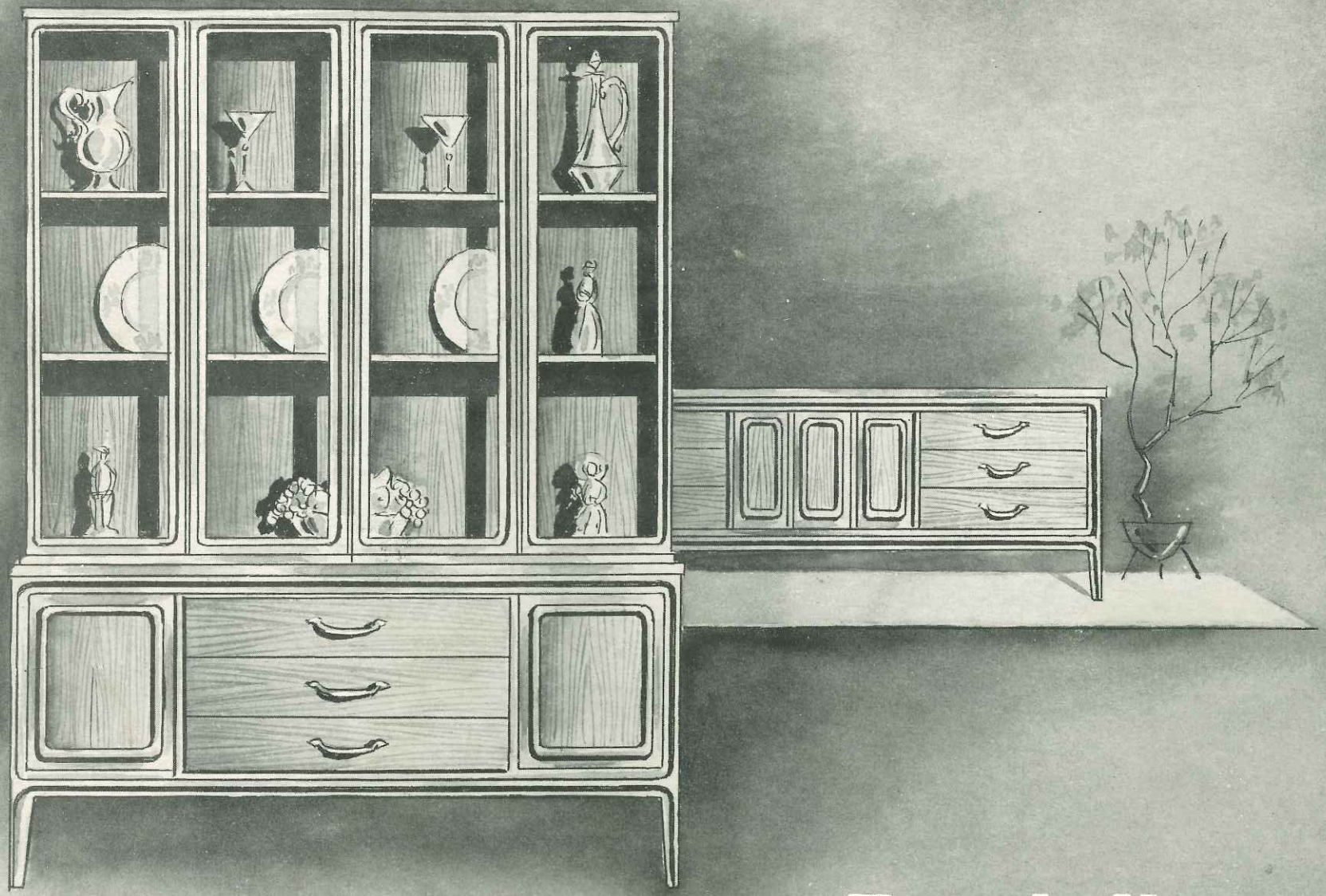

Broyhill
PREMIER